FIRST ANGLE PROJECTION (ALL DIMENSIONS IN MILLIMETRES)

CAUTION THE INFORMATION ON THIS DOCUMENT IS THE PROPERTY OF BHARAT HEAVY ELECTRICALS LTD. IT MUST NOT BE USED DIRECTLY OR INDIRECTLY IN ANY WAY DETRIMENTAL TO THE INTEREST OF THE COMPANY.

DRAWING No. 2-80-655-15964

05-228/C

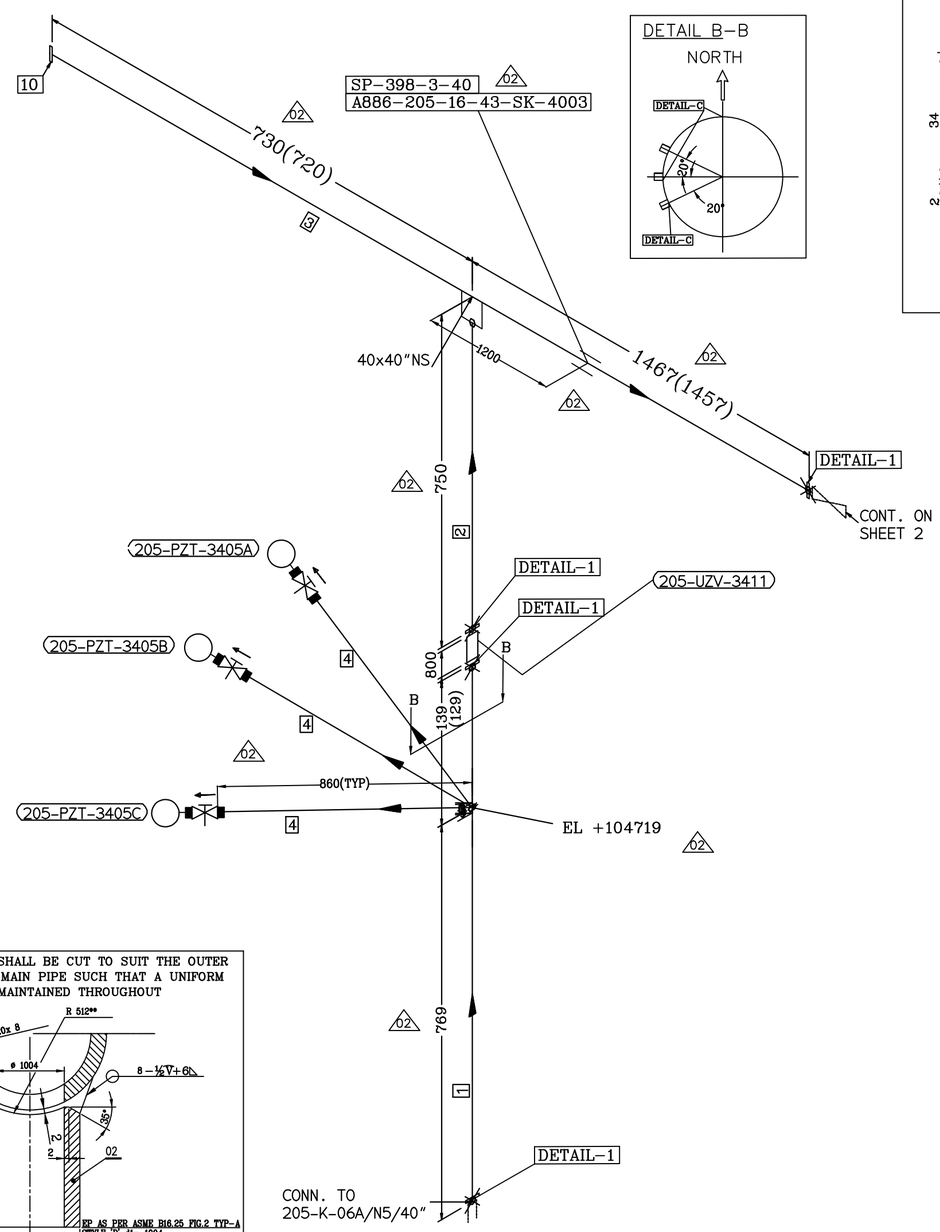





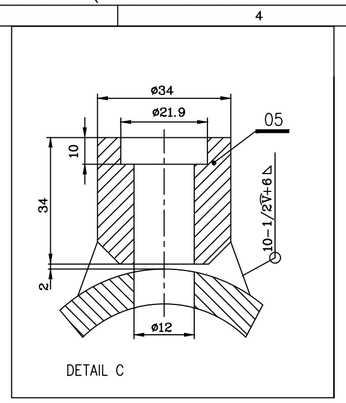


NOTES: **ALL DIMENSIONS ARE IN MILLIMETRES**

1. DESIGN PRESSURE – 0.2 KG/CM2 (G) DESIGN TEMPERATURE: 450°C
2. FOR STANDARD NOTES OF PRODUCTION AND ERECTION OF PIPES AND TOLERANCE ON FITTINGS REFER DRG NO. 4-80-001-37654 & 4-80-301-26192
3. FOLLOW APPLICABLE QP AND PAINTING SCHEDULE FOR THE PROJECT
4. ALL UNMARKED BENDS/ELBOWS ARE 90 DEG
5. PIPE ENDS SHALL BE BEVELLED AS PER B16.25 FIG.2 TYPE-A
6. GASKET IS SUPPLIED VIDE 7419-80-733 PGMA.
7. FOR ELECTRODE DATA REFER

| PIPE SIZE | MATERIAL SPEC | EP FIG | WELD SPEC | ELECTRODE DATA | |
|---|---|---|---|---|---|
| | | | | ROOT RUN | FILLER RUN |
| OD1020x8 | ASTMA516 GR.70 | FIG-A | 8 V | ER70S-2/ E6010/E6013 | ER70S-2/ E7016/E7018 |

8. THREADS SHALL BE UNIFIED(UNC FOR UPTO 1" DIA) AS PER ASME B1.1 WITH CLASS 2A FIT FOR STUDS AND CLASS 2B FIT FOR NUTS.
9. 01 ⌀ INDICATES WELD AT SHOP.
10. 01 ⌀ INDICATES WELD AT SITE.

** BRANCH PIPE SHALL BE CUT TO SUIT THE OUTER SURFACE OF THE MAIN PIPE SUCH THAT A UNIFORM GAP OF 2mm IS MAINTAINED THROUGHOUT

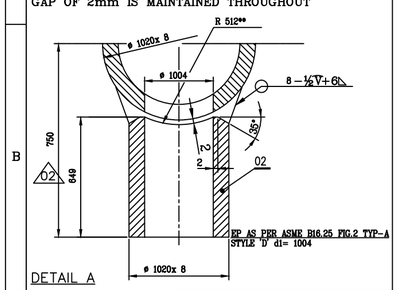


DETAIL A

DETAIL-1

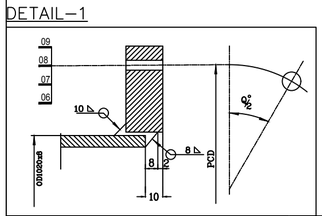


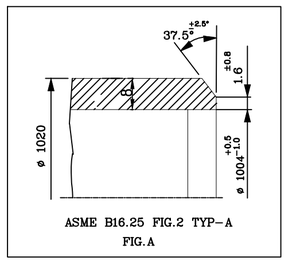


ASME B16.25 FIG.2 TYP-A
FIG.A

| ITEM CODE | ITEM NO. | DESCRIPTION | DRAWING NO. | ITEM NO. / VAR | MATERIAL CODE / MATERIAL SPEC. | A / C | UNIT WT. / QTY. |
|---|---|---|---|---|---|---|---|
| FBF6321Z032ZZZZZZ | 10 | FLANGE.BLIND CL.150 FF/125AARH 40" | 2-80-655-16009 | 08 | 150230560000 / ASTM A 516 GR.70 | C | 80.731 / 1 |
| GKFDR22Z032022ZZZZ | 09 | GASKET JOB STD EXPANDED PTFE CORD 150# 7MM THK – 40" | 2-80-655-15964 | | ---- / ---- | | --.-- / 3 |
| --- | 08 | NUT 5/8" UNC | 2-80-655-15964 | | ---- / A194 GR.2H | | 0.033 / 256 |
| --- | 07 | STUD 5/8" UNC L=113mm | 2-80-655-15964 | | ---- / A193 GR.B7 | | 0.224 / 128 |
| FNF6321Z032ZZZZZZ | 06 | FLANGE.SO CL.150 FF/125AARH 40" | 2-80-655-16008 | 08 | 150230560000 / ASTM A 516 GR.70 | C | 38.306 / 4 |
| WK602D3Z004ZZZZZZ | 05 | B16.11 SW HALF COUPLING 1/2" CL 6000 | 4-80-655-83151 | | --- / ASTM A 105 | C | 0.210 / 3 |
| P121977Z00410ZZZZ | 04 | PIPE OD21.3X4.78 L=2000 | 2-80-655-15964 | | --- / ASTM A 106 GR.B | C | 1.947 / 1 |
| P18Y613Z03263ZZZZ | 03 | P.F PIPE OD1020X8 L=2177 02 | 2-80-655-16047 | 10 | 15 011 150 0000 / ASTM A 516 GR.70 | C | 434.632 / 1 |
| 02 P18Y613Z03263ZZZZ | 02 | P.F BRANCH PIPE OD1020X8 L=649 | 2-80-655-16047 | 09 | 15 011 150 0000 / ASTM A 516 GR.70 | C | 129.375 / 1 |
| P18Y613Z03263ZZZZ | 01 | P.F PIPE OD1020X8 L=898 02 | 2-80-655-16047 | 08 | 15 011 150 0000 / ASTM A 516 GR.70 | C | 179.283 / 1 |

| REV | DATE | ALTERED | M.P.K |
|---|---|---|---|
| 01 | 30.05.19 | APPROVED | TRINADH |

ZONE: DRAWING REVISED AS PER LATEST EIL DRAWING. REVISION MARKED AS 02

| REV | DATE | ALTERED | M.P.K |
|---|---|---|---|
| 01 | 29.04.19 | APPROVED | TRINADH |

ZONE: DRAWING REVISED AS PER MAIL FROM EIL DT: 24.04.19 REVISION MARKED AS 01

N

CUSTOMER: INDIAN OIL CORPORATION LIMITED (HALDIA)

CONSULTANT: ENGINEERS INDIA LIMITED (EIL) NEW DELHI

BHEL CUSTOMER NO: 7419

NAME OF PROJECT: BS-VI, HALDIA

BHARAT HEAVY ELECTRICALS LTD., PIPING CENTRE, CHENNAI 600 017

| | NAME | SIGN | DATE |
|---|---|---|---|
| DRN | M.P.K | -sd- | 05.03.19 |
| CHD | TRINADH | -sd- | 05.03.19 |
| APPD | C.SARAVANAN | -sd- | 05.03.19 |

NO OF ITEMS

DEPT. / CODE / GRADE OF UN TOL. DIM C/M/F / SCALE / WEIGHT (Kg). / ITEM No.

TITLE: 40-P-205-3402-K24A-IH-E (SH1 OF 2)

EIL DRAWING NO:

CARD CODE: U 01

DRAWING No. 2-80-655-15964

REV 02

SIZE A2

V: A2